ANDRO IP ADJUSTABLE SURFACE MOUNTED

OUTDOOR / SPOTLIGHT

ambience

MAKING LIGHT WORK

PHYSICAL	
Size	XS, S, M
Installation Method	Adjustable Surface Mounted
Accessories	Honeycomb Louvre, Without Accessory
IP Rating	IP54
Finish	Textured White, Textured Black, Custom
Rotate Angle	355°
Tilt Angle	90°

ELECTRICAL	
Wattage	10W, 15W, 25W
Forward Current	250mA, 350mA, 600mA
Voltage	240V
Dimming Control	1-10V Dimmable, DALI Dimmable, Non-Dimmable, Phase-Cut Dimmable

RoHS

OPTICAL	
Optic	Lens
Distribution	Narrow / Medium / Wide / Flood
CCT	2700K, 3000K, 4000K
CRI	CRI90
System Lumen	882lm - 2270lm
System Efficacy	Up to 95lm/W
Light Output Ratio	80
Lifetime (L70B50)	50,000hrs

IP54

ADDITIONAL	
LED Module	Standard Tridonic SLE G7
LED Driver	Integral, Remote
Warranty	5 Years

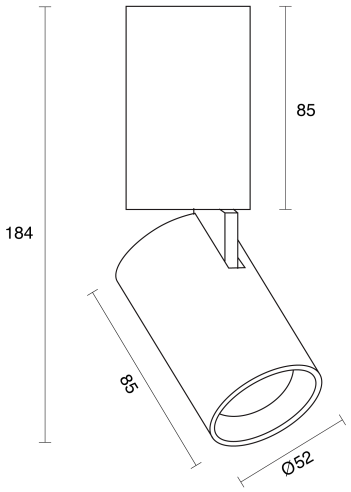

Andro XS

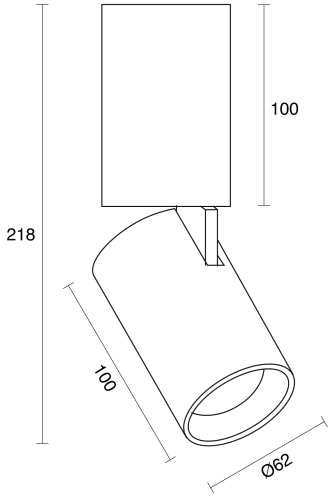

Andro S

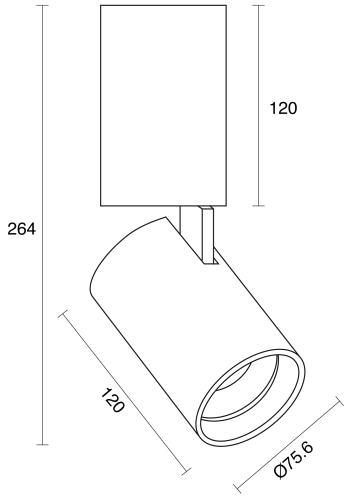

Andro M