ANDRO ADJUSTABLE SURFACE MOUNTED

INDOOR / SPOTLIGHT

ambience

MAKING LIGHT WORK

PHYSICAL	
Size	XXS, XS, S, M
Installation Method	Adjustable Surface Mounted
Accessories	Honeycomb Louvre, Softening Lens, Without Accessory
IP Rating	IP20
Finish	Textured White, Textured Black, All White, Non-Brushed Aluminium, Custom
Rotate Angle	355°
Tilt Angle	90°

ELECTRICAL	
Wattage	6W, 10W, 15W, 25W
Forward Current	150mA, 250mA, 350mA, 600mA
Voltage	240V
Dimming Control	1-10V Dimmable, Casambi Dimmable, DALI Dimmable, Phase-Cut Dimmable

OPTICAL	
Optic	Lens
Distribution	Spot / Narrow / Medium / Wide / Flood
CCT	2200K, 2400K, 2700K, 3000K, 4000K
CRI	CRI90
System Lumen	261lm - 2270lm
System Efficacy	Up to 95lm/W
Light Output Ratio	80
Lifetime (L70B50)	50,000hrs

RoHS

IP20

ADDITIONAL	
LED Module	Luminus CXM-3 GEN4, Standard Tridonic SLE G7
LED Driver	Integral, Remote
Warranty	5 Years, 5 Years-finish not accounted for, fitting subject to oxidation.

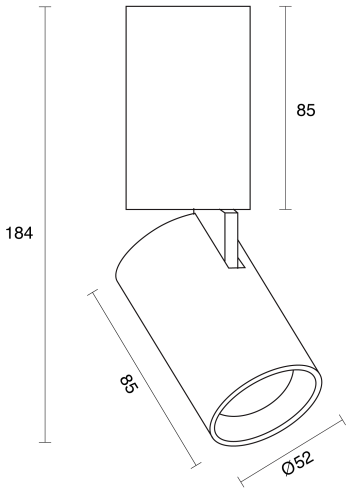

Andro XS

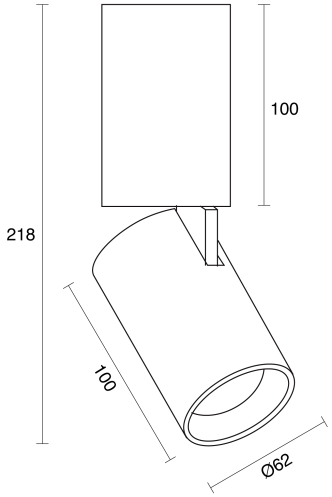

Andro S

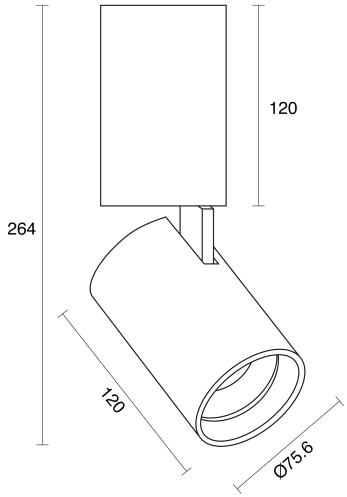

Andro M

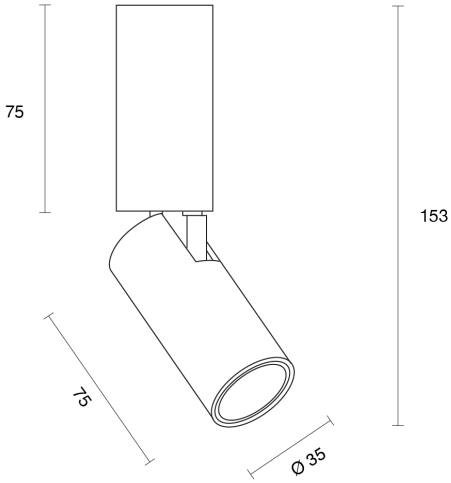

Andro XXS